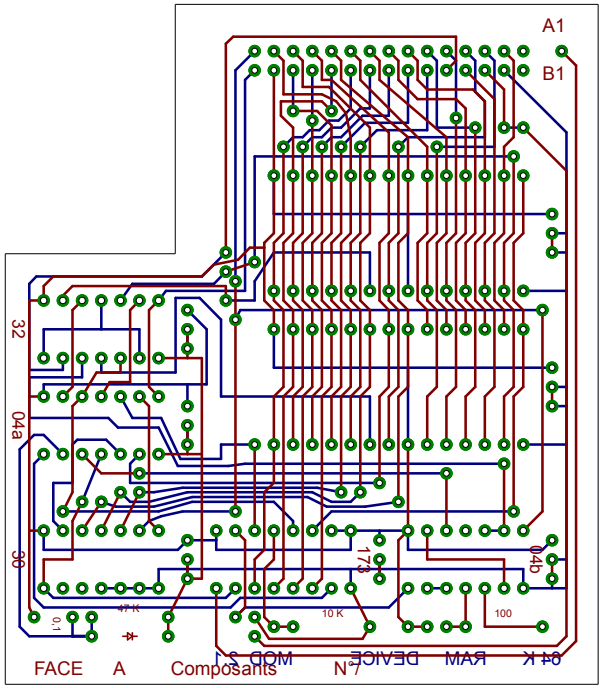
A1
B1
32
04a
36
0.1
47 K
10 K
17c
04b
100
FACE A Composants N°7
64 K RAM DEVICE MOD 21